Seismic Response of a Rigid Steam Generator suspended from a Simplified Supporting Structure

Prepared by

J.L. Bogdanoff, H. Lo, and G. Guthrie

School of Aeronautics and Astronautics
Purdue University
West Lafayette, Indiana

Submitted to

THE NATIONAL SCIENCE FOUNDATION

February 1978

Abstract

It is shown by means of a linear model that the dynamic loads in the vertical support rods of a steam generator under horizontal seismic disturbance may be significant and are dependent upon how the steam generator is braced laterally. The limitations of a linear analysis are discussed. The main conclusion is that the dynamic loads in the vertical support rods receive study during the design process.

Acknowledgement

The support of the National Science Foundation under Grant No. GI-41897 is gratefully acknowledged.

1. Introduction

This report continues the investigation started in [1]. We observed in [1] that finite element computer codes such as SAP IV and NASTRAN do not take into account the potential energy of the pendulum type motion encountered in a SG supported by a set of vertical support rods. Recall that in a simple pendulum the vertical rise in the bob is of second order in small lateral displacements; a linear analysis omits this effect on which pendulum motion depends. This may be a significant omission when estimating the response of a SG to a seismic disturbance. In [1], we made a detailed analysis of the potential energy stored in the vertical rods under small displacements of the SG relative to the structure from which the supporting rods are suspended. The rods were treated as elastic. The axial elasticities of the rods can be adjusted to contain local elasticities at either or both ends; thus, the fact that some rods are spring supported at their upper end can be taken into account. Bending potential energy was neglected because the rods have very small diameters relative to their lengths, and because little bending restraint is provided by the boundary conditions at the ends. Rods of different lengths due to different attachment elevations both at the top support and on the SG were considered. Hence, individual properties of each vertical support rod can be taken into account in forming the potential energy stored in these rods in an arbitrary, small displacement of the SG relative to the top of its supporting structure which is regarded as rigid. The kinetic energy of the

SG treated as a rigid body and moving relative to the structure from which the vertical rods are attached was then derived. From the two expressions for the energies, the equations of motion were obtained. The natural frequencies (nf's) and normal modes follow in the usual manner, and, with them, an equivalent system of vertical supporting rods giving the same nf's and normal modes was constructed for use in the computer codes.

It became apparent in carrying out the work reported in [1] that during motion the dynamic loads at any time t in the vertical support rods could be very different from their static values because of the geometry of the system. An example which helps illustrate this possibility is the bifilar pendulum; in torsion the strings at the ends of the horizontal member cause the rod to lift vertically and any strings in between the ends would thereby cease to carry any load. Since the SG is suspended by hundreds of support rods, the possibility of unloading some and overloading others during motion becomes readily apparent. Further, it becomes clear that the geometry of the lateral attachments of the SG to SS could significantly influence the loads in the vertical support rods during motion and visa versa. An investigation of the loads in vertical support rods and horizontal tie rods during response to seismic disturbances thus becomes of some interest.

We shall investigate in this report the loads in the vertical support rods and in the horizontal tie rods as a function of their geometric configuration when the base of a simple supporting structure is subject to a set of earthquake accelerograms

suitably normalized. In order to focus on this problem, we shall only consider a very simple supporting structure. Three dimensional linear equations of motion are derived assuming that the vertical support rods can carry compression, the SG may be treated as a rigid body, and the top girder system forms a rigid body. Numerical results are presented in a two-dimensional example. As the number of possible arrangements, even in the two-dimensional case, is vast, results obtained must be considered as an indicator of a possible problem area.

We first describe the simple system considered; next, a procedure for deriving the three-dimensional equations of motion is presented; a two-dimensional numerical example is then considered; we close with a discussion and conclusions.

A word of caution on the interpretation of numerical results is in order. The analysis is a linear one. This means, for example, that during the motion the vertical support rods will carry compression; since the upper ends of the rods can freely lift up from their supports, compressive loads actually cannot be carried; thus, the actual distribution of loads in the vertical support rods will be different from what is obtained by our analysis. Additional comments on the limitations of a linear analysis will be given below at the appropriate place.

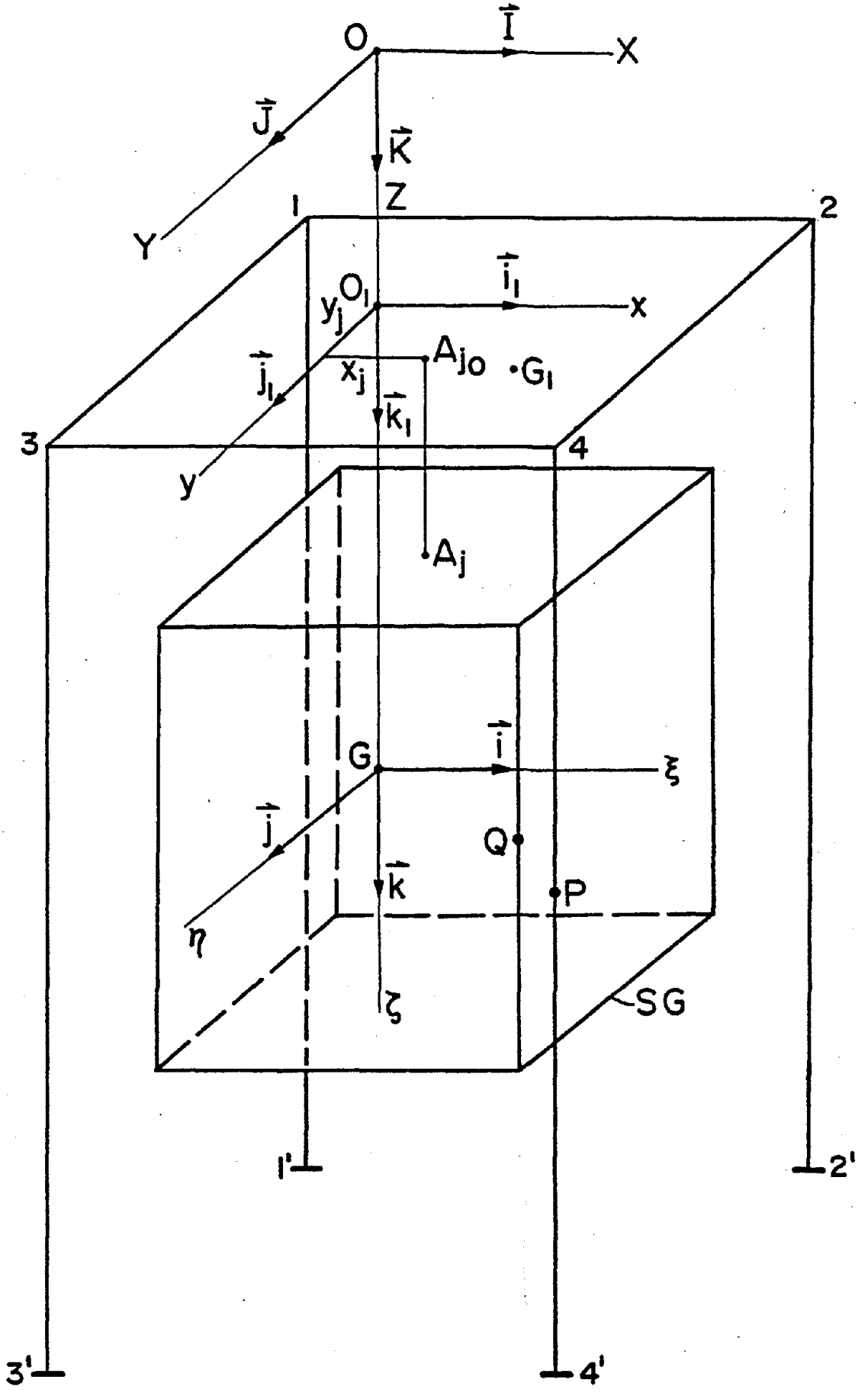
O
$\vec{I}$
X
$\vec{J}$
$\vec{K}$
Z
Y
1
2
O_1
$\vec{i}_1$
x
y_j
A_{jo}
G_1
$\vec{j}_1$
x_j
$\vec{k}_1$
3
4
y
A_j
G
$\vec{i}$
ξ
$\vec{j}$
Q
$\vec{k}$
P
η
ζ
SG
1'
2'
3'
4'

Figure 2.1

2. Equations of Motion

Figure 2.1 is essentially the same as Figure 1.1 of [1], except that the top 1234 of the SS and its supporting columns 11', 22', 33', 44' are shown. The top 1234 of the SS is the girder-beam system of the actual structure; we assume 1234 is rigid. The base of the SS is 1'2'3'4'; we assume 1'2'3'4' is rigid. The rectangular cartesian coordinate system OXYZ with unit vectors $\vec{I}$, $\vec{J}$, $\vec{K}$ is fixed in space, with the OXY plane horizontal. The base 1'2'3'4' is subject to seismic disturbances in its horizontal plane. The columns 11', 22', 33', 44' can only deform in lateral shear; they remain straight throughout the motion, each is of length L_o, and they do not deform vertically; this assumption is made to simplify the computation of the lateral displacement of a point of attachment to the frame of a horizontal tie rod. Thus, the top 1234 only can move in its horizontal plane. The O_1xyz rectangular cartesian coordinate system is fixed in 1234; at rest, O_1 lies on the line containing $\vec{K}$; O_1xy is parallel to OXY; and $\vec{i}_1$, $\vec{j}_1$, $\vec{k}_1$ are unit vectors along the Oxyz-axes. G_1 is the mass center of the top 1234. G is the mass center of the SG; at rest, G lies on the line containing $\vec{K}$. Thus, O, O_1, G lie on the same vertical line when the system is at rest. The rectangular cartesian coordinates $G\xi\eta\zeta$ with unit vectors $\vec{i}$, $\vec{j}$, $\vec{k}$ are fixed in the SG.

We show only the jth vertical support rod in Figure 2.1 in order not to clutter the figure. For simplicity, we show that

point of attachment A_{j_o} of the jth rod to the top is in the O_1xy plane with coordinates $(x_j, y_j, 0)$ relative to the O_1xyz-axes, and the point of attachment A_j to the SG is in the top of the SG. The length of the jth rod is l_j. Actually, the rod geometry we will use is shown in Figure 1.1 of [1] (See Appendix A). We assume n rods.

The horizontal displacement of the base 1'2'3'4' due to a seismic disturbance will be denoted by $x_o(t)$, $y_o(t)$; these displacement components are along $\vec{I}$ and $\vec{J}$, respectively.

The displacement of the top 1234 with respect to the base 1'2'3'4' is denoted by x_1, y_1, ψ_1, where x_1, y_1 are the component displacements of O_1, and ψ_1 is the rotation about a vertical line through O_1 parallel to $\vec{k}_1$ or $\vec{K}$ and positive in the right-hand sense.

The displacement components of G of the SG with respect to 1234 will be denoted by u, v, w, ϕ, θ, ψ where u, v, w are the translations parallel to the axes and ϕ, θ, ψ are the rotations about the axes. The coordinates u, v, w, ϕ, θ, ψ are taken with respect to 1234 since the results in [1] are with respect to the top supporting structure.

The absolute displacement components of O_1 are

$$(2.1) \quad x_o + x_1,\ y_o + y_1,\ \psi\ ;$$

and the absolute displacement components of G are

$$(2.2) \quad u + x_o + x_1,\ v + y_o + y_1,\ w,\ \phi,\ \theta,\ \psi + \psi_1$$

Let the coordinates of G_1 with respect to the Oxy-axes be $\bar{x}$ and $\bar{y}$. Then, the kinetic energy T_1 of 1234 is given by

$$(2.3)\quad 2T_1 = m_1[(\dot{x}_1 + \dot{x}_o - \bar{y}\dot{\psi}_1)^2 + (\dot{y}_1 + \dot{y}_o + \bar{x}\psi_1)^2] + C_1\psi_1^2,$$

where m_1 is the mass and C_1 is the moment of inertia about a line through G_1 parallel to $\vec{K}$ of the rigid mass 1234. The kinetic energy of the SG is taken from [1] with suitable modification; it is

$$\begin{aligned}(2.4)\quad 2T_{SG} = {} & a_{11}(\dot{u} + \dot{x}_o + \dot{x}_1)^2 + a_{22}(\dot{v} + \dot{y}_o + \dot{y}_1)^2 + a_{33}\dot{w}^2 \\ & + a_{44}\dot{\phi}^2 + 2a_{45}\dot{\phi}\dot{\theta} + 2a_{46}\dot{\phi}(\dot{\psi} + \dot{\psi}_1) \\ & + a_{55}\dot{\theta}^2 + 2a_{56}\dot{\theta}(\dot{\psi} + \dot{\psi}_1) \\ & + a_{66}(\dot{\psi} + \dot{\psi}_1)^2\end{aligned}$$

where $a_{11} = a_{22} = a_{33} = m$ the mass of the SG, $a_{44} = A$, $a_{55} = B$, $a_{66} = C$, $A_{45} = -H$, $a_{46} = -G$, $a_{56} = -F$, and A, B, C, F, G, H are the moments and products of inertia of the SG with respect to the $G\xi\eta\zeta$ - axes. The kinetic energy of the system is

$$(2.5)\quad T = T_1 + T_{SG}$$

The potential energy of the SS excluding the horizontal tie rods will be taken as

$$\begin{aligned}(2.6)\quad 2V_1 = {} & k_{11}x_1^2 + 2k_{12}x_1y_1 + 2k_{13}x_1\psi_1 \\ & + k_{22}y_1^2 + 2k_{23}y_1\psi_1 \\ & + k_{33}\psi_1^2 \;;\end{aligned}$$

this form only depends upon the deformation of the SS with respect to the base. The potential energy of the SG including the vertical support rods and excluding the horizontal tie rods depends only upon the deformation of this system with respect to 1234; thus it is exactly the same as derived in [1], and is

$$
\begin{aligned}
(2.7)\quad 2V_{SG} = {} & c_{11}u^2 + 2C_{15}u\theta + 2C_{16}u\psi \\
& + C_{22}v^2 + 2C_{24}v\phi + 2C_{26}v\psi \\
& + C_{33}w^2 + 2C_{34}w\phi + 2C_{35}w\theta \\
& + C_{44}\phi^2 + 2C_{34}\phi\theta + 2C_{46}\phi\psi \\
& + C_{55}\theta^2 + 2C_{56}\theta\psi \\
& + C_{66}\psi^2
\end{aligned}
$$

where for the jth supporting rod t_j is it's static tension, c_j is the vertical distance above $G\xi\eta\zeta$ plane of point A_j, where the rod attaches to SG, l_j is its length, (x_j, y_j) are the x,y-coordinates of A_j, k_j is the spring constant of the rod and it's attachments, and

$$
(2.8)\quad \begin{cases}
c_{11} = c_{12} = \sum \frac{t_j}{l_j}, \; - c_{15} = c_{24} = \sum \frac{t_j c_j}{l_j}, \\
c_{16} = - \sum \frac{t_j y_j}{l_j}, \quad c_{26} = \sum \frac{t_j x_j}{l_j}, \\
c_{33} = \sum k_j, \quad c_{34} = \sum k_j y_j, \quad c_{35} = - \sum k_j x_j \\
c_{44} = \sum (t_j c_j + \frac{t_j c_j^2}{l_j} + k_j y_j^2), \quad c_{45} = - \sum k_j x_j y_j \\
c_{46} = \sum \frac{t_j x_j c_j}{l_j}, \quad c_{55} = \sum (t_j c_j + \frac{t_j c_j^2}{l_j} + k_j x_j^2) \\
c_{56} = \sum \frac{t_j y_j c_j}{l_j}, \quad c_{66} = \sum \frac{t_j (x_j^2 + y_j^2)}{l_j}
\end{cases}
$$

The potential energy of deformation of a horizontal tie rod depends upon the relative displacement of its points of attachment to the SG and SS. This means we need the horizontal displacement components of any point of the SG and on the SS relative to the base 1'2'3'4'.

Let Q_i be a point of the SG; let its coordinates relative to the $G\xi\eta\zeta$-axes be (ξ_i, η_i, ζ_i). Then, the horizontal components of its displacement relative to 1'2'3'4' are

$$
(2.9)\quad a_i = x_i + u - \eta_i(\psi+\psi_1) + \zeta_i\theta, \; b_i = y_i + v + \xi_i(\psi+\psi_1) - \zeta_i\phi.
$$

A horizontal tie rod may connect to any point on the SS; it may connect to one of the supporting columns; it also may connect to some point between columns. If it connects to a point between columns, we will assume that this point has horizontal displacement components that are of the same form as thos on a column at the same elevation with suitable xyz-coordinates. Thus, we need the horizontal displacement components of a point

P_i on a column (as shown); we then use this form of the displacement components if P_i is not on a column. We assume moment free boundary conditions for tie rods. Let L_o be the column length; let $(\underline{x}_i, \underline{y}_i, \underline{z}_i)$ be the coordinates relative to O_1xyz-coordinates of a point P_i. The horizontal components of the components of displacement of P_i relative to 1'2'3'4' are

$$(2.10) \quad c_i = x_1 \frac{L_o-\underline{z}_i}{L_o} - \underline{y}_i\psi_1 \frac{L_o-\underline{z}_i}{L_o}, \quad d_i = y_1 \frac{L_o-\underline{z}_i}{L_o} + \underline{x}_i\psi_1 \frac{L_o-\underline{z}_i}{L_o}$$

The components of the change in length of $\overline{Q_iP_i}$ are

$$(2.11) \quad a_i - c_i, \quad b_i - d_i$$

Let l_i denote the length of $\overline{Q_iP_i}$; then the direction cosines of $\overline{Q_iP_i}$ before deformation are

$$(2.12) \quad \lambda_i = (\xi_i - \underline{x}_i)/l_i, \quad \mu_i = (\eta_i - \underline{y}_i)/l_i;$$

Let K_i denote the spring constant of the horizontal tie rod $\overline{Q_iP_i}$ and its connections to the SG and SS. The potential energy of deformation of $\overline{Q_iP_i}$ is then

$$\frac{1}{2} K_i[\lambda_i(a_i-c_i) + \mu_i(b_i-d_i)]^2$$

Hence, the potential energy of all the horizontal tie rods is

$$(2.13) \quad 2V_{TR} = \sum K_i[\lambda_i\{\frac{\underline{z}_i}{L_o} x_1 + y - \eta_i\psi + \zeta_i\theta + (\underline{y}_i \frac{L_o-\underline{z}_i}{L_o} - \eta_i)\psi_1\}$$

$$+ \mu_i\{\frac{\underline{z}_i}{L_o} y_1 + v + \xi_i\psi - \zeta_i\phi - (\underline{x}_i \frac{L_o-\underline{z}_i}{L_o} - \xi_i)\psi_1\}]^2$$

The potential energy of the system is

$$(2.14) \quad V = V_1 + V_{SG} + V_{TR}$$

We take for the dissipation function F the following form

$$(2.15) \quad 2F = \alpha V_1 + \alpha V_{SG}$$
$$+ \sum_i \beta_i [\lambda_i \{\frac{z_i}{L_o} \dot{x}_1 + \dot{u} - \eta_i \dot{\psi} + \dot{\zeta}_i \dot{\theta} + (y_i \frac{L_o - y_i}{L_o} - \eta_i) \dot{\psi}_1\}$$
$$+ \mu_i \{\frac{z_i}{L_o} \dot{y}_1 + \dot{v} + \xi_i \dot{\psi} - \zeta_i \dot{\phi} - (x_i \frac{L_o - z_i}{L_o} - \xi_i) \dot{\psi}_1\}]^2$$

where $\alpha > 0$ is a constant and β_i is the damping parameter for $Q_i P_i$. The last term in the dissipation function was selected because it permits the possibility of a tie rod being replaced by a viscous damper.

The equations of motion are found using Lagrange's equations. For example, the Lagrange equation corresponding to the u-coordinates is

$$(2.16) \quad \frac{d}{dt} (\frac{\partial T}{\partial \dot{u}}) - \frac{\partial T}{\partial u} + \frac{\partial F}{\partial \dot{u}} + \frac{\partial V}{\partial u} = 0$$

The equations for the other coordinates are identical in form to this one with u replaced by the other coordinates in turn. T, V, and F are defined in (2.5), (2.14) and (2.15), respectively.

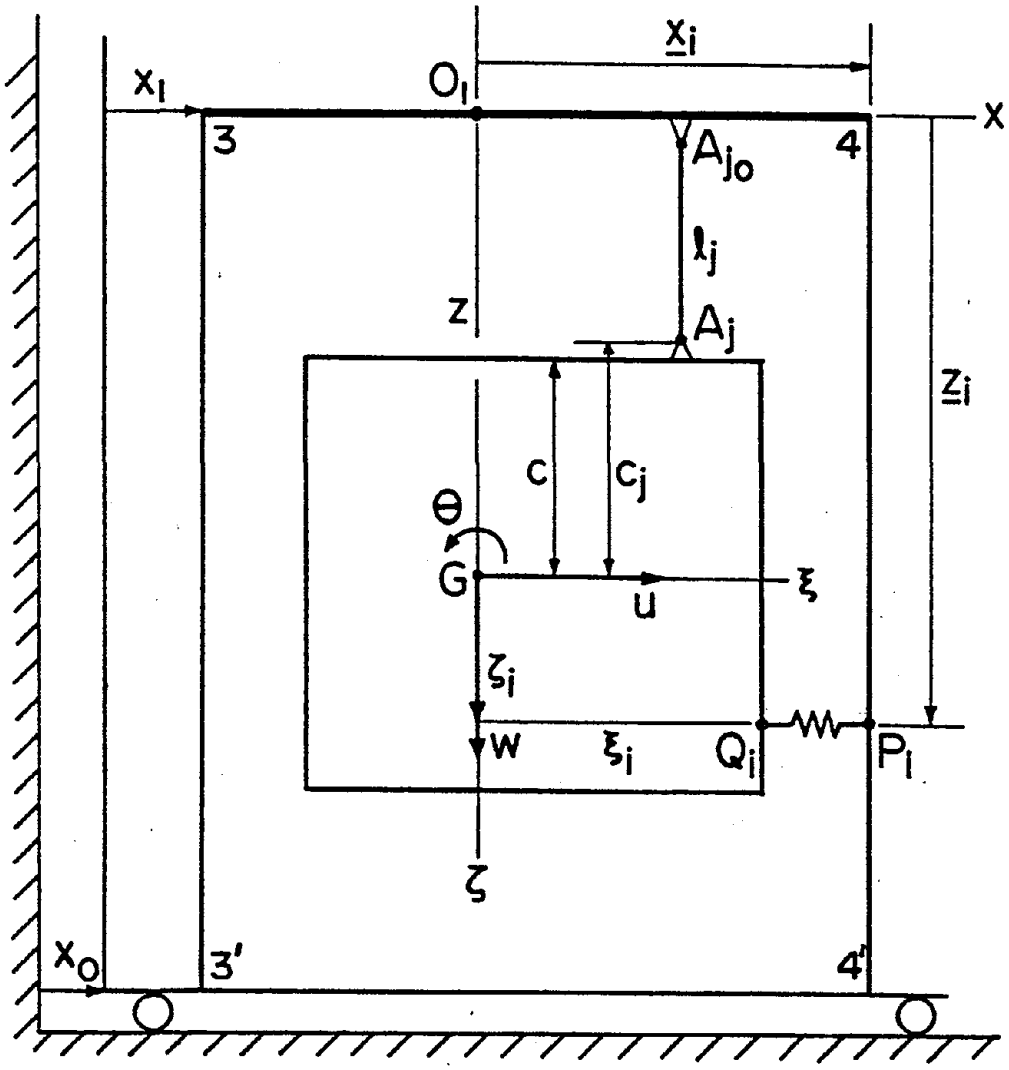

Figure 3.1

3. Two-dimensional Example

We consider the two dimensional version of the general problem shown in Figure 3.1. The coordinates of interest are

$$u,\ w,\ \theta,\ x_1,$$

with base motion x_0; thus, there are four degrees of freedom. We assume several horizontal tie rods. Using the results of Section 2, we find

$$(3.1)\quad \begin{cases} 2T = m_1(\dot{x}_1+\dot{x}_0)^2 + m[\dot{u}+\dot{x}_1+\dot{x}_0)^2 + \dot{w}^2] + B\dot{\theta}^2 \\ 2V = c_{11}u^2 + 2c_{15}u\theta + c_{33}w^2 + 2c_{35}w\theta + c_{55}\theta^2 \\ \quad + k_{11}x_1^2 + \sum K_i\ (\frac{z_i}{L_o}\ x_1 + u + \zeta_1\theta)^2 \\ 2F = b_{11}\dot{u}^2 + 2b_{15}\dot{u}\dot{\theta} + b_{33}\dot{w}^2 + 2b_{35}\dot{w}\dot{\theta} + b_{55}\dot{\ }^2 + \ _{11}\dot{x}_1^2 \\ \quad + \sum\beta_i(\frac{z_i}{L_o}\ \dot{x}_1 + \dot{u} + \zeta_i\dot{\theta})^2 \end{cases}$$

where $b_{ij} = \alpha c_{ij}$, $\beta_{11} = \alpha k_{11}$. The equations of motion are

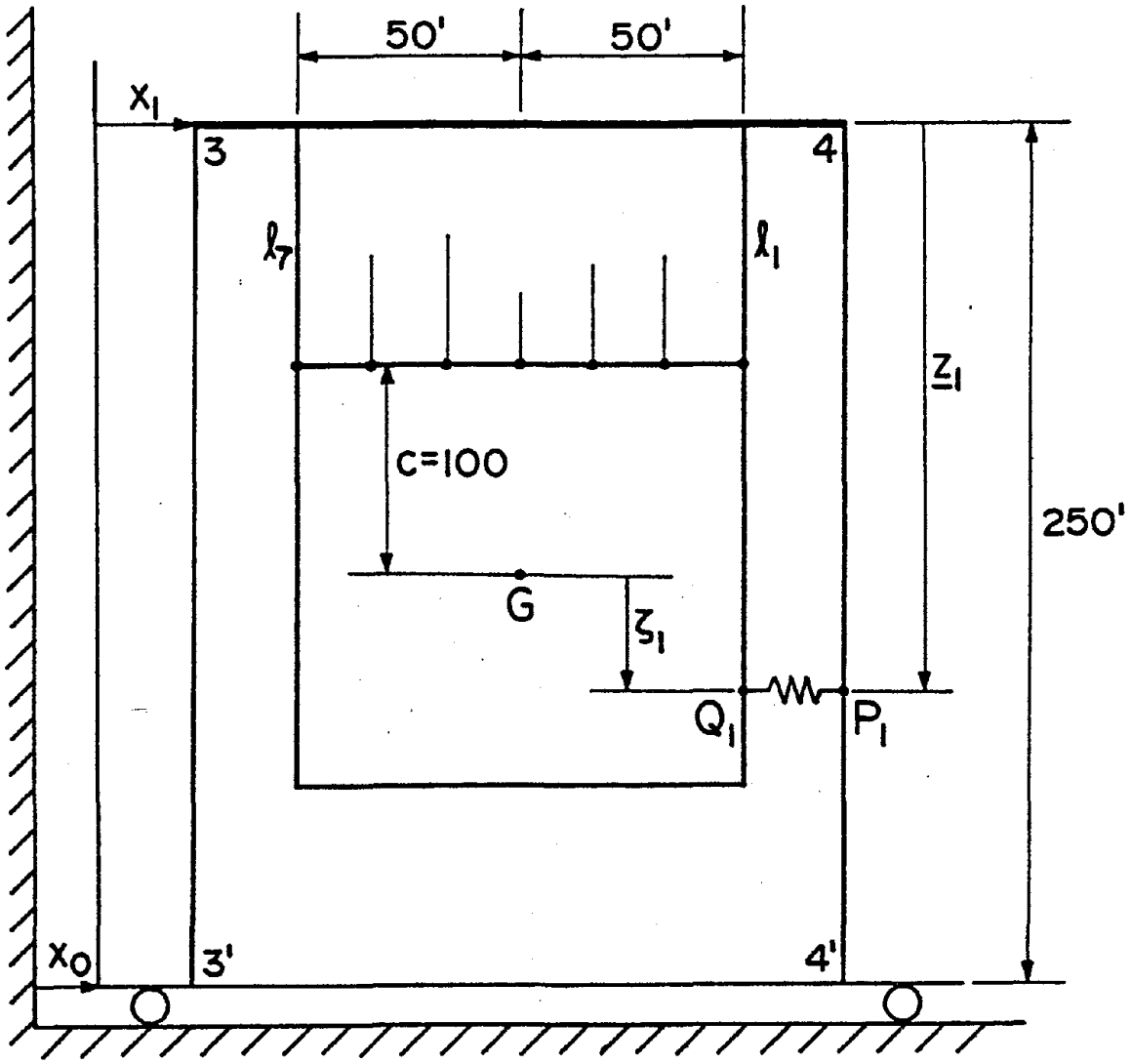

Figure 3.2

$$
(3.2)\quad \begin{cases}
m\ddot{u} + (b_{11} + \sum\beta_i)\dot{u} + (c_{11} + \sum K_i)u + (b_{15} + \sum\beta_i\zeta_i)\dot{\theta} \\
+ (c_{15} + \sum K_i\zeta_i)\theta + m\ddot{x}_1 + \sum\beta_i(\frac{z_i}{L_o})\dot{x}_1 + \sum K_i(\frac{z_i}{L_o})x_1 = m\ddot{x}_0 \\
m\ddot{w} + b_{33}\dot{w} + c_{33}w + b_{35}\Theta + c_{35}\Theta = 0 \\
(b_{15} + \sum\beta_i\zeta_i)\dot{u} + (c_{15} + \sum K_i\zeta_i)u + b_{35}\dot{w} + c_{35}w + B\ddot{\Theta} \\
+ (b_{55} + \sum\beta_i\zeta_i^2)\dot{\Theta} + (c_{55} + \sum K_i\zeta_i^2)\Theta + \sum\beta_i\zeta_i(\frac{z_i}{L_o})\dot{x}_1 \\
+ \sum K_i\zeta_i(\frac{z_i}{L_o})x_1 = 0 \\
m\ddot{u} + \sum\beta_i(\frac{z_i}{L_o})\dot{u} + \sum K_i(\frac{z_i}{L_o})u + \sum\beta_i\zeta_i(\frac{z_i}{L_o})\dot{\Theta} + K_i\zeta_i(\frac{z_i}{L_o})\Theta \\
+ (m+m_1)\ddot{x}_1 + [\beta_{11} + \sum\beta_i(\frac{z_i}{L_o})^2]\dot{x}_1 + [k_{11} + \sum K_i(\frac{z_i}{L_o})^2]x_1 \\
\quad = -(m+m_1)\ddot{x}_0
\end{cases}
$$

The change in the tension in the jth vertical support rod is

$$(3.3)\quad T_j - t_j = k_j(w - x_j\Theta) + \alpha k_j(\dot{w} - x_j\dot{\Theta})$$

and the force in the ith horizontal tie rod is

$$(3.4)\quad F_i = K_i(u + \zeta_i\theta + \frac{z_i}{L_o}x_1) + \beta_i(\dot{u} + \zeta_i\dot{\Theta} + \frac{z_i}{L_o}\dot{x}_1)$$

The specific numerical two-dimensional example is sketched in Figure 3.2. There are seven equally spaced vertical support rods with the center one directly above G. G is at the geometric center of the SG. There is one horizontal tie rod with three sets of values for ζ_1 and $\underline{z}_1$ given in the figure. The numerical data not given in the figure are as follows:

$m = 750M, \quad m_1 = 250M, \quad B = 3x10^6\ ML^2$

$t_j = 3,428F, \quad \alpha = 0.001$

Case a) Vertical support rods are of the same length

$c_{11} = 631F/L, \quad c_{15} = -\ 63,100F, \quad c_{33} = 2,8x10^5F/L,$

$c_{35} = 0, \quad c_{55} = 3.19x10^8FL, \quad \ell_i = \ell = 38', \quad c_j = c = 100'$

$k_{11} = 1.65x10^5F, \quad K_1 = 2x10^5F, \quad k_j = 4x10^4F, \quad \beta_1 = 0$

Case b) Same as a) except, $K_1 = 5x10^4F$, $\beta_1 = 0$

Case c) Same as a) except, $K_1 = 0$, $\beta_1 = 1.6x10^4$ FT/L

Case d) Same as a) except, $K_1 = 0$, $\beta_1 = 8.10^3$ FT/L

Case e) Vertical support rods are of variable length

$c_{11} = 965F, \quad c_{15} = -1.09x10^5F, \quad c_{33} = 4.27x10^5F, \quad c_{35} = 0,$

$c_{55} = 3.829x10^8FL$

$l_j = 38', 26.9', 20.2', 18', 20.2', 26.9', 38',$

$c_j = c = 100', \quad K_1 = 2x10^5F, \quad {}_1 = 0$

$k_{11} = 1.65x10^5F, \quad k_j = 4x10^4F, \quad 5.65x10^4F, \quad 7.5x10^4F,$

$8.4x10^4F, \quad 7.5x10^4F, \quad 5.65x10^4F, \quad 4x10^4F$

The units are

F = force in kips

M = mass in kips second^2/foot

L = length in feet

T = time in seconds

EXTREME VALUE PROBABILITY PAPER

Figure 3.3

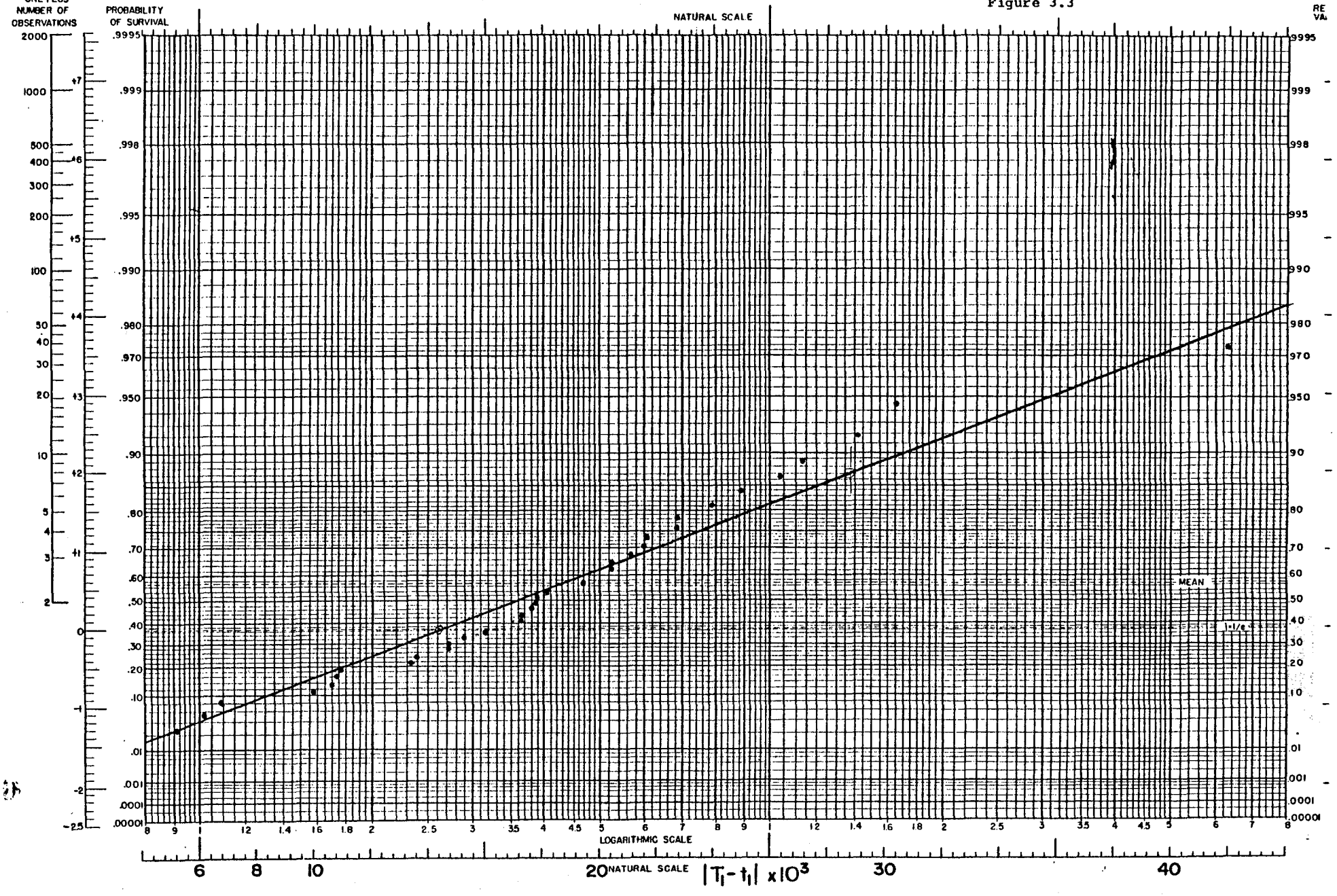

The computations are made for the five cases each with the three sets of ζ_1, $\underline{z}_1$.

The fact that $c_{35} = 0$ means the vertical motion w of G does not couple with the motion described by u, θ, x_1. In recording natural frequencies, we only consider the u, θ, x_1 motion; the natural frequencies are given in Table 3.1.

Thirty six earthquake accelerograms normalized to the maximum absolute value of one g are used for $\ddot{x}_0$. The thirty six accelerograms are identified in Table 3.2. They come from [2].

We compute for each normalized accelerogram the extreme of x_1, u, θ, T_1-t_1, and F_1 for the five sets of data. The extremes of T_1-t_1, and F_1 are listed in Table 3.3. We record the theoretical line [3] of $|T_1-t_1|$ and $|F_1|$ in Tables 3.4. One set of extreme value results and the corresponding theoretical line is shown in Figure 3.3.

Table 3.1

		1st	2nd	3rd
a)	ζ_1=-70, $\underline{z}_1$=68	1.00 Hz	2.88 Hz	6.00 Hz
	ζ_1=0, $\underline{z}_1$=138	1.64 Hz	2.24 Hz	4.75 Hz
	ζ_1=70, $\underline{z}_1$=208	1.07 Hz	3.75 Hz	4.46 Hz
b)	ζ_1=-70, $\underline{z}_1$=68	.87 Hz	2.24 Hz	4.49 Hz
	ζ_1=0, $\underline{z}_1$=138	1.26 Hz	1.64 Hz	4.23 Hz
	ζ_1=70, $\underline{z}_1$=208	.92 Hz	2.36 Hz	4.12 Hz
e)	ζ_1=-70, $\underline{z}_1$=68	1.07 Hz	2.93 Hz	6.01 Hz
	ζ_1=0 , $\underline{z}_1$=138	1.75 Hz	2.24 Hz	4.76 Hz
	ζ_1=70, $\underline{z}_1$=208	1.16 Hz	3.78 Hz	4.48 Hz
c & d)		.144 Hz	1.64 Hz	4.10 Hz

Table 3.2

Earthquake No.	Earthquake Name
1	Imperial Valley Earthquake COMP SOOE El Centro Site Imperial Valley Irrigation
2	Imperial Valley Earthquake COMP S90W El Centro Site Imperial Valley Irrigation
3	Northwest California Earthqucomp S44W Ferndale City Hall
4	Northwest California Earthqucomp N46W Ferndale City Hall
5	Kern County, California Eartcomp N21E Taft Lincoln School Tunnel
6	Kern County, California Eartcomp S69E Taft Lincoln School Tunnel
7	Eureka Earthquake COMP N11W Eureka Federal Bldg
8	Eureka Earthquake COMP N79E Eureka Federal Bldg
9	Eureka Earthquake COMP N44E Ferndale City Hall
10	Eureka Earthquake COMP N46W Ferndale City Hall
11	San Francisco Earthquake COMP N10E San Francisco Golden Gate Park
12	San Francisco Earthquake COMP S80E San Francosco Golden Gate Park
13	Hollister Earthquake COMP N89W Hollister City Hall
14	Lower California Earthquake COMP S00W El Centro Imperial Valley
15	Lower California Earthquake COMP S90W El Centro Imperial Valley
16	Helena, Montana Earthquake COMP S00W Helena, Montana Carroll College
17	Helena, Montana Earthquake COMP S90W Helena, Montana Carroll College
18	Western Washington Earthquakcomp N04W Olympia, Washington Hwy Test Lab
19	Western Washington Earthquakcomp N86E Olympia, Washington Hwy Test Lab
20	Puget Sound, Washington Eartcomp S04E Olympia, Washington Hwy Test Lab

Table 3.2 (cont.)

Earthquake No.	Earthquake Name
21	Puget Sound, Washington Eartcomp S86W Olympia, Washington Hwy Test Lab
22	Parkfield, California Earthqcomp N65E Cholame, Shandon, California Array No. 2
23	Parkfield, California Earthqcomp N05W Cholame, Shandon, California Array No. 5
24	Parkfield, California Earthqcomp N85E Cholame, Shandon, California Array No. 5
25	Parkfield, California Earthqcomp N50E Cholame, Shandon, California Array No. 8
26	Parkfield, California Earthqcomp N40W Cholame, Shandon, California Array No. 8
27	Parkfield, California Earthqcomp N65W Temblor, California No. 2
28	Parkfield, California Earthqcomp S25W Temblor, California No. 2
29	San Fernando Earthquake COMP S16E Pacoima Dam, California
30	San Fernando Earthquake COMP S74W Pacoima Dam, California
31	San Fernando Earthquake COMP N00W 8244 Orion Blvd. 1st Floor, Los Angeles, Cal.
32	San Fernando Earthquake COMP S90W 8244 Orion Blvd. 1st Floor, Los Angeles, Cal.
33	San Fernando Earthquake COMP N21E Castaic Old Ridge Route, Cal.
34	San Fernando Earthquake COMP N69W Castaic Old Ridge Route, Cal.
35	San Fernando Earthquake COMP N11E 15250 Ventura Blvd., Basement, Los Angeles, Cal.
36	San Fernando Earthquake COMP N79W 15250 Ventura Blvd., Basement, Los Angeles, Cal.

Table 3.4

a)	$\zeta_1=-70$, $\underline{z}_1=68$	$\lvert F_1\rvert_y = 32300 + 16900\ y$
		$\lvert T_1-t_1\rvert_y = 14400 + 6400\ y$
	$= 0$, $= 138$	$\lvert F_1\rvert_y = 65300 + 43000\ y$
		$\lvert T_1-t_1\rvert_y = 169 + 110\ y$
	$=+70$, $= 208$	$\lvert F_1\rvert_y = 35100 + 12500\ y$
		$\lvert T_1-t_1\rvert_y = 12200 + 5800\ y$
b)	$\zeta_1=-70$, $\underline{z}_1=68$	$\lvert F_1\rvert_y = 26200 + 16300\ y$
		$\lvert T_1-t_1\rvert_y = 14700 + 9710\ y$
	$= 0$, $= 138$	$\lvert F_1\rvert_y = 30000 + 19400\ y$
		$\lvert T_1-t_1\rvert_y = 870 + 636\ y$
	$=+70$, $= 208$	$\lvert F_1\rvert_y = 28000 + 12300\ y$
		$\lvert T_1-t_1\rvert_y = 14600 + 6190\ y$
c)	$\zeta_1=-70$, $\underline{z}_1=68$	$\lvert F_1\rvert_y = 10700 + 4910\ y$
		$\lvert T_1-t_1\rvert_y = 6550 + 3820\ y$
	$= 0$, $= 138$	$\lvert F_1\rvert_y = 15070 + 3190\ y$
		$\lvert T_1-t_1\rvert_y = 104 + 76\ y$
	$=+70$, $= 208$	$\lvert F_1\rvert_y = 11000 + 4760\ y$
		$\lvert T_1-t_1\rvert_y = 6680 + 3630\ y$
d)	$\zeta_1=-70$, $\underline{z}_1=68$	$\lvert F_1\rvert_y = 8600 + 4250\ y$
		$\lvert T_1-t_1\rvert_y = 5300 + 3200\ y$

Table 3.4 (cont.)

	$= 0, = 138$	$\lvert F_1 \rvert_y = 11200 + 3300\ y$
		$\lvert T_1 - t_1 \rvert_y = 200 + 150\ y$
	$=+70, = 208$	$\lvert F_1 \rvert_y = 8520 + 4100\ y$
		$\lvert T_1 - t_1 \rvert_y = 5200 + 3060\ y$
e)	$\zeta_1=-70,\ \underline{z}_1=68$	$\lvert F_1 \rvert_y = 32200 + 15800\ y$
		$\lvert T_1 - t_1 \rvert_y = 13300 + 6400\ y$
	$= 0, = 138$	$\lvert F_1 \rvert_y = 73200 + 42700\ y$
		$\lvert T_1 - t_1 \rvert_y = 360 + 210\ y$
	$=+70, = 208$	$\lvert F_1 \rvert_y = 35200 + 13000\ y$
		$\lvert T_1 - t_1 \rvert_y = 11900 + 6100\ y$

Table 3.5

		$\lvert F_1 \rvert_{2.25}$	$\lvert T_1 - t_1 \rvert_{2.25}$
a)	$\zeta_1 = -70$, $\underline{z}_1 = 68$	70,300	28,800
	= 0, = 138	162,000	417
	= 70, = 208	63,500	25,300
b)	$\zeta_1 = -70$, $\underline{z}_1 = 68$	62,900	36,500
	= 0, = 138	73,700	2,300
	= 70, = 208	55,700	28,500
c)	$\zeta_1 = -70$, $\underline{z}_1 = 68$	21,700	15,100
	= 0, = 138	22,200	275
	= 70, = 208	21,700	14,800
d)	$\zeta_1 = -70$, $\underline{z}_1 = 68$	18,200	12,500
	= 0, = 138	18,600	538
	= 70, = 208	17,700	12,100
e)	$\zeta_1 = -70$, $\underline{z}_1 = 68$	67,800	27,700
	= 0, = 138	169,000	838
	= 70, = 208	64,450	25,600

The variable y determines the theoretical cdf (cumulative distribution function) of $|F_1|$ and $|T_1-t_1|$. Thus,

(3.5) $P\{|F_1| \leq |F_1|_y\} = p_y = P\{|T_1-t_1| \leq |T_1-t_1|_y\}$

where

y	p_y	or	y	p_y
0	.368		.356	.50
1	.692		.672	.60
2	.873		1.03	.70
3	.951		1.50	.80
4	.982		2.25	.90
5	.993		2.967	.95
			4.60	.99
			5.30	.995

since

(3.6) $p_y = e^{-e^{-y}}$

is the theoretical cdf. [3]

Let us consider y = 2.25; this corresponds to $p_y = .90$. The values $|F_1|_{2.25}$ and $|T_1-t_1|_{2.25}$ are such that the probability of remaining below them is .90. Put another way, the values $|F_1|_{2.25}$ and $|T_1-t_1|_{2.25}$ are such that in 10 earthquakes having max |accel.| = 1g only one on the average will produce $|F_1|$ and $|T_1-t_1|$ that exceed these values. Other choices of y of p_y yield similar statements. Table 3.5 records for the five cases $|F_1|_{2.25}$ and $|T_1-t_1|_{2.25}$.

If earthquakes have max |accel.| = γg, where $0 < \gamma$, the numbers in Tables 3.4 and 3.5 must be multiplied by γ.

The first thing to notice about Table 3.5 is the magnitude of $|T_1-t_1|$. The static tension t_1 in vertical support rod 1 is 3,428k. Since the maximum compressive load in T_1-t_1 is either equal to $|T_1-t_1|$ or slightly below the value $|T_1-t_1|$, it is clear that rod 1 will have to carry a substantial compressive load for earthquake accelerograms normalized to a max. absolute value of 1g; this is impossible in the physical situation. Thus, to keep T_1 from becoming negative, γ must be adjusted in each case in Table 3.5 so that $|T_1-t_1| \leq 3{,}428k$. Hence, the analysis is physically meaningful, strictly speaking, for such γ. If we take the max. $|T_1-t_1|$ in each case, we find

$\gamma \leq$	Case
.117	a)
.094	b)
.227	c)
.274	d)
.122	e)

Another point needs mention. The analysis is linear and, in the numerical example considered, there is no vertical displacement w. Due to the inclination of the vertical support rods at the extreme lateral displacement of the c.g. G of the SG there is a small vertical displacement of the lower end of each rod. The loads in the vertical support rods are not adjusted for this small vertical displacement.

Let us proceed with an examination of the results in Table 3.5 with these restrictions in mind.

The most striking results in Table 3.5 is the fact that $|T_1-t_1|_{2.25}$ is relatively small when $\zeta_1 = 0$, $\underline{z}_1 = 138$. Even for earthquakes normalized to max |accel.| = 1g these values are below static tension $t_1 = 3{,}428$ whether an elastic spring or a dashpot is used for the lateral support. Thus, in this configuration, the vertical support rods all remain in tension according to this model. The reason $|T_1-t_1|$ is so small in this arrangement of the lateral tie rod is that max $|\theta|$ is very small in comparison to the max $|\theta|$'s encountered with the other two arrangements of the tie rod.

Next observe $|T_1-t_1|_{2.25}$ for $\zeta_1 = -70$, $\underline{z}_1 = 68$ and $\zeta_1 = 70$, $\underline{z}_1 = 208$. Here we see that even for earthquakes with max |accel.| = .3g $|T_1-t_1|_{2.25}$ exceeds the static tension $t_1 =$ 3,420k for all cases. For case b), we note $|T_1-t_1|_{2.25} = 10{,}950$. Thus, on the average in one earthquake out of 10 with max |accel.| = .3g, the extreme vertical support rod will have to carry a very substantial compressive load according to this model. Since the physical vertical support rods cannot carry any compressive load as noted above, the model does not represent the physical situation. This means that to obtain a correct evaluation of vertical support rod dynamic loads a model must be used in which compressive loads cannot occur. We note that these observations hold for a horizontal tie rod that is either an elastic spring or a viscous dashpot.

The max value of $|F_1|_{2.25}$ occurs when $\zeta_1 = 0$ and $\underline{z}_1 = 138$, and is largest for cases a) and e). The weight of the SG is 23,884. Cases c) and d) (viscous dashpot for horizontal tie rod) have $|F_1|_{2.25}$ fairly close to the weight 23,884 of the SG for earthquakes with max |accel.| = 1g and all configurations of the horizontal tie rod. For cases a), b), and e), $|F_1|_{2.25}$ exceeds by a substantial amount the weight of the SG for all horizontal tie rod configurations. This suggests that there is considerable dynamic amplification in this case. Examination of Table 3.1 suggests that $|F_1|_{2.25}$ becomes large when the first nf exceeds 1.10 Hz.

Damping is fairly small in the numerical results shown so far; specifically, the fraction of critical damping in the first mode is approximately 0.31%. This is a small value. However, in a steam generating plant which consists mainly of open steel frames, etc. there are not the usual mechanisms for introducing damping encountered in office buildings. To obtain some appreciation for the significance of damping, let us set $\alpha = 0.01$; this gives as fraction of critical damping in the first mode approximately 3.1%. Numerical results for Case a) of Table 3.5 now becomes

Table 3.5a

		$\|F_1\|_{2.25}$	$\|T_1-t_1\|_{2.25}$
a)	$\zeta_1=-70$, $\underline{z}_1=68$	54,400	24,000
	= 0, = 138	106,700	282
	= 70, = 208	51,800	20,500

Higher damping produces a reduction in $|F_1|_{2.25}$ and $|T_1-t_1|_{2.25}$ for all configurations as is seen by comparison to the results in Table 3.5 a). The reduction is not dramatic for a ten-fold increase in damping. Thus, for damping in the range considered the conclusions already reached still stand.

4. Discussion and Conclusions

Section 2 shows how the three-dimensional equations of motion are constructed. A simple model of the SS is used. The SG is regarded as a rigid body. The vertical support rods are treated as elastic and pin-ended. The lateral support rods may be purely elastic or viscous or a combination. For more complex models for the SS and/or an elastic SG, the same general procedure for constructing the equations of motion can be followed.

A three-dimensional numerical example was not presented because a substantial number of choices of configurations would have to be considered to explore fully the significance of all the factors. Such an investigation must be deferred to the future.

A numerical two-dimensional example is considered in Section 3. The equations of motion are a special case of three-dimensional equations of motion. One horizontal tie rod is considered and it is either purely elastic or purely viscous; this rod can take one of three configurations. Seven equally spaced and centered vertical support rods are considered; in one configuration, the rods have the same length and in the other the lengths vary with the shortest in the center and the longest on the two ends. The extreme responses of the motion, the change in force T_1-t_1 in the end vertical rod, and the force F_1 in the horizontal tie rod were computed using as ground acceleration thirty six earthquake accelerograms normalized to have a max

|accel.| = 1g. The extreme responses for T_1-t_1, F_1, $|T_1-t_1|$ and $|F_1|$ are tabulated, and the theoretical lines for $|T_1-t_1|$ and $|F_1|$ are listed. The nf's for the various configurations are also given.

The main conclusions which can be drawn are a) that the dynamic loads in the vertical support rods are dependent upon the configuration of the horizontal tie rod with some configurations producing much smaller dynamic loads than others; b) if the max |accel.| of ground excitation is in the range of .3g, then the influence of the unloading of some of the vertical support rods should be accounted for in the equations of motion including deformation of the top support 1234 if a reasonable picture of the dynamic loads in the vertical support rods is to be obtained; and c) attention should be given in design to the dynamic loads the vertical support rods must carry.

The conclusions are based upon a simple two-dimensional model subject to only horizontal ground motion. The extrapolation of specific numerical results to an actual structure is not warrented. However, the general conclusion just stated must have some validity for real structures.

The two-dimensional linear model considered restricts the SG motion to translation in the plane of the model and rotation about a line perpendicular to that plane. The extreme loads in the vertical tie rods occur in the rods on the outside. In three-dimensional motion, torsion can occur. The bifilar pendulum supported by several strings suggests what will happen in this case. When the bifilar pendulum is in torsion, the two

outside strings carry the vertical load while the inside strings carry no load. This observation suggests that when the SG is in torsion relative to the top of the SS, the vertical tie rods near the four horizontal top corners of the SG will carry the major share of the vertical load while the inside rods will carry very little of the vertical load if any, and some of the inside rods may be unloaded. Again, to get an accurate estimate of the loads in the vertical support loads it is necessary to limit the compressive loads to zero. Further, the configuration of the horizontal tie rods may have a substantial influence on the dynamic loads in the vertical support rods.

It is reasonable to state in summary that the dynamic loads in the vertical support rods of a steam generating plant merit examination during the design process.

References

1. Lo, H., and J.L. Bogdanoff, "Derivation of Equations of Motion of a Free Rigid Body Steam Generator supported by Vertical Elastic Rods," Submitted to NSF, Oct. 1977.

2. Digital form of Earthquake Accelerograms, California Institute of Technology, Pasadena, CA.

3. E J. Gumbel, Statistical Theory of Extreme Values and Some Practical Applications: A Series of Lectures, US Government Printing Office, Washington D.C., 1954.

Table 3.3

Case a)

		T_1			X_1			
y_1	L_1	Norm Min	Norm Max	Norm Abs	Norm Min	Norm Max	Norm Abs	Earthquake Number
70	68	-27160	24780	27160	- 43360	38660	43360	1
70	68	-22650	21740	22650	- 45440	55410	55410	2
70	68	-10500	11090	11090	- 20700	23050	23050	3
70	68	-20470	18980	20470	- 28720	29570	29570	4
70	68	-19860	20560	20560	- 56420	46880	56420	5
70	68	-17690	16130	17960	- 39880	46710	46710	6
70	68	-25870	30320	30320	- 70000	71950	71950	7
70	68	-11270	14650	14650	- 39480	50350	50350	8
70	68	-21600	20540	21600	- 37330	36470	37330	9
70	68	-29210	27380	29210	- 38340	38110	38340	10
70	68	- 6149	5185	6149	- 19600	19860	19860	11
70	68	- 6190	6797	6797	- 15710	17130	17130	12
70	68	-21110	20750	21110	- 41990	35030	41990	13
70	68	-19060	17920	19060	- 52330	49440	52330	14
70	68	-24020	22380	24020	- 49050	51730	51730	15
70	68	- 5073	5421	5421	- 19020	18120	19020	16
70	68	-19580	21730	21730	- 54360	52130	54360	17
70	68	-24950	24380	24950	- 63050	58930	63050	18
70	68	-17790	17430	17790	- 30470	30100	30470	19
70	68	-15370	13950	15370	- 29190	29030	29190	20
70	68	-17610	16960	17610	- 35430	37250	37250	21
70	68	-18230	17560	18230	- 29930	30580	30580	22
70	68	- 9773	8955	9773	- 24000	24470	24470	23
70	68	-13080	13550	13550	- 41730	48390	48390	24
70	68	-17440	16140	17440	- 24670	26410	26410	25
70	68	-10770	10650	10770	- 22610	21730	22610	26
70	68	-10540	10600	10600	- 28210	27120	28210	27
70	68	-13360	12740	13360	- 45890	41080	45890	28
70	68	-17040	19520	19520	- 29190	29370	29370	29
70	68	-14110	16060	16060	- 38790	39300	39300	30
70	68	-17010	15310	17010	- 41440	36490	41440	31
70	68	-40590	41830	41830	-112200	114800	114800	32
70	68	-17400	17060	17400	- 51390	52640	52640	33
70	68	-23740	26490	26490	- 49040	46610	49040	34
70	68	-11040	14700	14700	- 38930	38250	38930	35
70	68	-22730	21820	22730	- 81700	79320	81700	36

Table 3.3

Case a)

		T_1			X_1			
y_1	L_1	Norm Min	Norm Max	Norm Abs	Norm Min	Norm Max	Norm Abs	Earthquake Number
0	138	-245.9	249	249	-117700	114700	117700	1
0	138	-452.7	448	448	-161400	163200	163200	2
0	138	-175.7	184	184	- 89780	95720	95720	3
0	138	-233.4	210.9	233.4	-119400	120000	120000	4
0	138	-378.2	385.6	385.6	- 70200	69400	70200	5
0	138	-311.7	298.6	311.7	-192900	191500	192900	6
0	138	-219.5	201.3	219.4	- 92100	74450	92100	7
0	138	-424.3	432.2	432.2	-187800	195500	195500	8
0	138	-224	222.5	225	- 88500	73410	88500	9
0	138	-166.3	157.6	166.3	- 33640	39080	39080	10
0	138	- 38.63	45.90	45.90	- 18750	24320	24320	11
0	138	- 73.15	70.52	73.15	- 45760	45910	45910	12
0	138	-184	181.3	184	- 90140	100600	100600	13
0	138	-405.5	374.6	405.5	-131200	130700	131200	14
0	138	-217.8	220.9	220.9	- 98580	100500	100500	15
0	138	-107.4	101.4	107.4	- 50880	46750	50880	16
0	138	-100.2	105.6	105.6	- 67800	58530	67800	17
0	138	-515.7	504.7	515.7	-168700	171700	171700	18
0	138	-361.1	375.3	375.3	- 71180	73270	73270	19
0	138	-252.5	275.2	275.2	- 55300	59550	59550	20
0	138	-180.1	180.4	180.4	- 43870	41150	43870	21
0	138	-324.6	303.7	324.6	-103000	93280	103000	22
0	138	-141.1	150.8	150.8	- 80380	81550	81550	23
0	138	-109	111.2	111.2	- 53740	52470	53740	24
0	138	-129.5	128.8	129.5	- 73870	73570	73870	25
0	138	-102.3	109.7	109.7	- 48770	50020	50020	26
0	138	-119.4	112.6	119.4	- 79360	79070	79360	27
0	138	-110.3	108.7	110.3	- 73340	68060	73340	28
0	138	-139.2	129.7	139.2	- 80230	85520	85520	29
0	138	-181.3	164.6	181.3	- 79440	77640	79440	30
0	138	-481.7	465.6	481.7	-153300	148600	153300	31
0	138	-385.4	362.2	385.4	-153100	164900	164900	32
0	138	-113.8	109	113.8	- 75880	77830	77830	33
0	138	-319.8	341.9	341.9	-173900	169000	173900	34
0	138	-132.5	133.3	133.3	- 55590	66940	66940	35
0	138	-298.1	275.5	298.1	-184100	189400	189400	36

Table 3.3

Case a)

		T_1			X_1			
y_1	L_1	Norm Min	Norm Max	Norm Abs	Norm Min	Norm Max	Norm Abs	Earthquake Number
-70	208	-25700	22040	24700	-45720	57550	57550	1
-70	208	-19930	20830	20830	-60210	58620	60210	2
-70	208	- 7925	8340	8340	-34170	35340	35340	3
-70	208	-16280	15590	16280	-40280	32780	40280	4
-70	208	-25300	27120	27120	-55670	56650	56650	5
-70	208	-15980	18720	18720	-54260	47590	54260	6
-70	208	-22410	22190	22410	-54010	60820	60820	7
-70	208	-11580	9572	11580	-37810	28960	37810	8
-70	208	-24250	19590	24250	-44680	42580	44680	9
-70	208	-24110	25340	25340	-47340	34610	47230	10
-70	208	- 7435	7945	7945	-43020	46870	46870	11
-70	208	- 6266	6323	6323	-25920	30590	30590	12
-70	208	-16940	15910	16940	-35190	36280	36280	13
-70	208	-14150	15240	15240	-66620	64120	66620	14
-70	208	-14630	13210	14630	-68380	75600	75600	15
-70	208	- 3466	3236	3466	-21450	20870	21450	16
-70	208	-19000	19010	19010	-51710	53370	53370	17
-70	208	-21460	23260	23260	-53640	59450	59450	18
-70	208	-12820	13900	13900	-47090	47470	47470	19
-70	208	-22350	21250	22350	-59390	52750	59290	20
-70	208	-17780	14390	17780	-42940	39270	42940	21
-70	208	-14760	14590	14760	-31160	29880	31160	22
-70	208	- 6963	10090	10090	-22010	30150	30150	23
-70	208	- 7825	6161	7825	-23060	19900	23060	24
-70	208	- 8826	8653	8826	-45310	43600	45310	25
-70	208	-13210	12100	13210	-23660	22510	23660	26
-70	208	- 6395	7540	7540	-30890	34400	34400	27
-70	208	- 3016	8411	8411	-30280	24040	30280	28
-70	208	-16570	17540	17540	-42350	42500	42500	29
-70	208	-10390	10470	10470	-28950	29020	29020	30
-70	208	-16560	17630	17630	-37900	35770	37900	31
-70	208	-32830	31290	32830	-72100	65780	72100	32
-70	208	- 7853	10520	10520	-29500	30510	30510	33
-70	208	-24870	21730	24870	-48920	38600	48920	34
-70	208	-13680	15700	15700	-32750	33860	33860	35
-70	208	-16760	17130	17130	-56070	55100	56070	36

Table 3.3

Case b)

y_1	L_1	T_1 Norm Min	T_1 Norm Max	T_1 Norm Abs	X_1 Norm Min	X_1 Norm Max	X_1 Norm Abs	Earthquake Number
70	68	-28680	24280	28680	-45270	46420	46420	1
70	68	-29010	31490	31490	-56710	55010	56710	2
70	68	-10840	10610	10840	-20450	19430	20450	3
70	68	-21120	20440	21120	-37830	35390	37830	4
70	68	-16990	19820	19820	-20430	32970	32970	5
70	68	-23090	24040	24040	-48580	51160	51160	6
70	68	-33060	30030	33060	-60540	46380	60540	7
70	68	-21990	19160	21990	-36770	37260	27260	8
70	68	-44950	41770	44950	-70010	69570	70010	9
70	68	-24480	26890	26890	-43090	45980	45980	10
70	68	- 3546	2517	3546	- 7032	10380	10380	11
70	68	- 7380	6935	7380	-14420	12360	14420	12
70	68	-17190	17940	17940	-27130	27140	27140	13
70	68	-18430	18870	18870	-32750	33880	33880	14
70	68	-16200	16850	16850	-33760	30500	33760	15
70	68	- 4958	5096	5096	-12790	11820	12790	16
70	68	-19250	18610	19250	-34500	36660	36660	17
70	68	-54880	50780	54880	-84500	86170	86170	18
70	68	-12110	13280	13280	-21740	21620	21740	19
70	68	-10800	10030	10800	-16290	22180	22180	20
70	68	- 8516	9291	9291	-14450	13100	14450	21
70	68	-20630	19380	20630	-36170	37490	37490	22
70	68	- 9585	10710	10710	-19380	20760	20760	23
70	68	-14380	13120	14380	-23900	24710	24710	24
70	68	-15200	15310	15310	-26010	24280	26010	25
70	68	- 9728	9626	9728	-16150	15710	16150	26
70	68	-12330	11590	12330	-20270	21580	21580	27
70	68	-13750	13560	13760	-26720	23500	26720	28
70	68	-16290	17180	17180	-24840	27700	27700	29
70	68	-13510	13480	13510	-20330	20360	20360	30
70	68	-33550	29480	33550	-57480	60630	60630	31
70	68	-32850	33870	33870	-66820	74600	74600	32
70	68	-13900	14480	14480	-23430	25230	25230	33
70	68	-25760	21330	25760	-37350	41420	41420	34
70	68	-15250	14310	15250	-28040	25280	28040	35
70	68	-29400	25250	29400	-45670	45040	45670	36

Table 3.3

Case b)

		T_1			X_1			
y_1	L_1	Norm Min	Norm Max	Norm Abs	Norm Min	Norm Max	Norm Abs	Earthquake Number
0	138	-1459	1485	1485	-51550	53080	53080	1
0	138	-2374	2536	2536	-72130	71230	72130	2
0	138	-6729	6787	6787	-28650	27590	28650	3
0	138	-1421	1367	1421	-67040	66970	67040	4
0	138	-2576	2756	2756	-72950	71670	72950	5
0	138	-1361	1367	1367	-61560	63680	63680	6
0	138	-1183	1245	1245	-36510	33140	36510	7
0	138	-1602	1665	1665	-38570	38670	38670	8
0	138	-2298	2334	2334	-86940	93220	93220	9
0	138	-1550	1628	1628	-67240	65260	67240	10
0	138	- 346.1	346.0	346.1	-16970	16120	16970	11
0	138	- 197.0	217.7	217.7	- 9493	13220	13220	12
0	138	-1150	1174	1174	-46020	47770	27770	13
0	138	-1911	1849	1911	-39690	36490	39690	14
0	138	-1075	1059	1075	-33040	34810	34810	15
0	138	- 423.4	439.3	439.3	-13910	13340	13340	16
0	138	- 710.0	740.7	740.7	-34340	30500	34340	17
0	138	-1859	1928	1928	-36510	38890	38890	18
0	138	-1750	1786	1786	-39970	38700	39970	19
0	138	-1523	1378	1523	-40030	40100	40100	20
0	138	-1092	1186	1186	-31620	31850	31850	21
0	138	-1927	1997	1997	-55750	55890	55890	22
0	138	- 546.2	554.1	554.1	-25470	25370	25470	23
0	138	- 471.4	488.2	488.2	-15690	13150	15690	24
0	138	- 546.6	562.4	562.4	-17860	19330	19330	25
0	138	- 546.0	570.3	570.3	-22620	24820	24820	26
0	138	- 260.9	249.6	260.9	- 9677	9337	9677	27
0	138	- 248.8	279.0	279.0	-13260	10060	13260	28
0	138	- 405.4	421.5	421.5	-19410	20820	20820	29
0	138	- 589.4	573.5	589.4	-16630	20070	20070	30
0	138	-2114	2067	2114	-65750	61620	61620	31
0	138	-2098	2194	2194	-79850	84150	84150	32
0	138	- 561.4	544.8	561.4	-28250	28650	28650	33
0	138	-1787	1620	1787	-57670	61840	61840	34
0	138	- 822.6	732.4	822.6	-32380	32020	32380	35
0	138	-1031	984.7	1031	-33650	32320	33650	36

Table 3.3

Case b)

		T_1			X_1			
y_1	L_1	Norm Min	Norm Max	Norm Abs	Norm Min	Norm Max	Norm Abs	Earthquake Number
-70	208	-18160	21390	21390	-35090	31220	35090	1
-70	208	-27150	28950	28950	-53480	56510	56510	2
-70	208	-10840	12330	12330	-24650	23750	24650	3
-70	208	-22290	20750	22290	-40650	43110	43110	4
-70	208	-23830	20930	23830	-34420	38830	38830	5
-70	208	-21460	21540	21540	-42670	47390	47390	6
-70	208	-28630	30020	30020	-57560	51200	57560	7
-70	208	-15880	15870	15880	-34280	35490	35490	8
-70	208	-22090	23790	23790	-41940	36810	41940	9
-70	208	-22760	23650	23650	-47020	40460	47020	10
-70	208	- 4116	3984	4116	- 8100	9760	9760	11
-70	208	- 7804	7450	7804	-15450	15030	15450	12
-70	208	-21300	20180	21300	-42750	42020	42750	13
-70	208	-17190	18070	18070	-33080	32860	33080	14
-70	208	-22120	21360	22120	-45320	47540	47540	15
-70	208	- 6321	6417	6417	-13940	15080	15080	16
-70	208	-20130	20340	20340	-38000	36380	38000	17
-70	208	-28040	27600	28040	-29790	50580	50580	18
-70	208	- 9926	11880	11880	-18710	19550	19550	19
-70	208	-12250	11540	12250	-23770	21760	23770	20
-70	208	-12200	12370	12370	-20130	21010	21010	21
-70	208	-17330	16190	17330	-29400	28180	29400	22
-70	208	-12090	12310	12310	-26560	25200	26560	23
-70	208	-12000	11700	12000	-25730	22250	25730	24
-70	208	-10990	11370	11370	-20880	20910	20910	25
-70	208	-14090	12990	14090	-26210	26400	26400	26
-70	208	-10050	10210	10210	-19790	19400	19790	27
-70	208	-12380	12670	13280	-29180	27990	29180	28
-70	208	-16630	15670	16630	-29120	33700	33700	29
-70	208	-15540	14800	15540	-30230	32030	32030	30
-70	208	-26290	23230	26290	-45600	46300	46300	31
-70	208	-32370	28080	32370	-61560	72190	72190	32
-70	208	-15150	14140	15150	-27550	27930	27930	33
-70	208	-22920	23090	23090	-45840	47940	47940	34
-70	208	-13220	12170	13220	-31510	25640	25640	35
-70	208	-23650	25540	25540	-48500	51500	51500	36

Table 3.3

Case c)

y_1	L_1	T_1 Norm Min	T_1 Norm Max	T_1 Norm Abs	X_1 Norm Min	X_1 Norm Max	X_1 Norm Abs	Earthquake Number
70	68	- 8490	9488	9488	-13150	13550	13550	1
70	68	-10310	11470	11470	-17190	13920	17190	2
70	68	- 3268	3663	3663	- 5831	3916	5831	3
70	68	- 5257	5472	5472	- 7270	9313	9313	4
70	68	- 7521	9147	9147	- 8322	10990	10990	5
70	68	- 7992	8720	8720	- 9016	10700	10700	6
70	68	-12420	7203	12420	-12450	18970	18970	7
70	68	- 5464	5846	5846	- 8261	9116	9116	8
70	68	-15240	10930	15240	-17400	25420	25420	9
70	68	-15830	8804	15830	-15200	17970	17970	10
70	68	- 2673	1697	2673	- 5195	6483	6483	11
70	68	- 2593	2378	2593	- 7169	4479	7169	12
70	68	- 5178	5492	5492	-10040	7622	10040	13
70	68	-10210	5554	10210	-10750	14410	14410	14
70	68	- 5278	6803	6803	- 8126	5782	8126	15
70	68	- 2720	1844	2720	- 4637	4828	4828	16
70	68	- 8897	6695	8799	-10610	16690	16690	17
70	68	- 7485	7668	7668	-12050	15450	15450	18
70	68	- 4713	4839	4839	- 6590	7271	7271	19
70	68	- 5748	5032	5748	- 7562	8023	8023	20
70	68	- 5087	5345	5345	- 8080	7728	8080	21
70	68	-10220	9854	10220	- 9191	12940	12940	22
70	68	- 3652	2864	3652	- 5046	6052	6052	23
70	68	- 2667	2847	2847	- 7079	4423	7079	24
70	68	- 3945	2965	3945	- 5674	6002	6002	25
70	68	- 2424	3231	3231	- 5106	4276	5106	26
70	68	- 2612	2099	2612	- 7729	6147	7729	27
70	68	- 3612	3694	3694	- 5644	7838	7838	28
70	68	- 7259	5147	7259	- 8335	10190	10190	29
70	68	- 5131	3427	5131	- 5883	8810	8810	30
70	68	-10090	6999	10090	-10360	12210	12210	31
70	68	-10160	13600	13600	-17100	19530	19530	32
70	68	- 4201	3045	4201	- 5335	7264	7264	33
70	68	- 9125	9386	9386	-10340	13000	13000	34
70	68	- 4888	6011	6011	- 9208	8999	9208	35
70	68	- 7195	5135	7195	- 8316	13900	13900	36

Table 3.3

Case c)

y_1	L_1	T_1 Norm Min	T_1 Norm Max	T_1 Norm Abs	X_1 Norm Min	X_1 Norm Max	X_1 Norm Abs	Earthquake Number
0	138	-335.5	280.8	335.5	-11030	17030	17030	1
0	138	-537.4	588.5	588.5	-13920	18030	18030	2
0	138	-164.6	156.2	164.6	- 9546	9283	9546	3
0	138	-188.7	184.8	188.7	- 8805	13940	13940	4
0	138	-532.7	547.4	547.4	-13210	12520	13210	5
0	138	-296.4	242.1	296.4	-15540	14530	15540	6
0	138	-349.3	306.7	349.3	-12570	18370	18370	7
0	138	-350.4	379.2	379.2	-14920	11920	14920	8
0	138	-416.5	333.5	416.5	-19090	21530	21530	9
0	138	-275.3	284.3	284.3	-14290	19510	19510	10
0	138	- 61.85	67.56	67.56	- 7234	7695	7695	11
0	138	- 41.98	41.62	41.98	- 7913	7749	7749	12
0	138	-212.9	219.3	219.3	-13690	11340	13690	13
0	138	-437.4	451.0	451.0	-11350	13590	13590	14
0	138	-254.2	250.4	254.2	-10220	10690	10690	15
0	138	- 93.21	105.3	105.3	- 6556	8303	8303	16
0	138	- 98.66	199.7	199.7	-14030	14550	14550	17
0	138	-576.3	584.1	584.1	-11460	14150	14150	18
0	138	-470.6	488.7	488.7	-14460	7187	14460	19
0	138	-390.3	364.7	390.3	- 9829	10350	10350	20
0	138	-221.7	244.5	244.5	-10500	7071	10500	21
0	138	-369.0	487.6	487.6	-17280	12320	17280	22
0	138	-110.0	113.6	113.6	-13190	9280	13190	23
0	138	- 90.77	135.0	135.0	-10670	6343	10670	24
0	138	-159.9	95.36	159.9	- 6082	5876	6082	25
0	138	-129.8	107.8	129.8	- 8262	6811	8262	26
0	138	- 78.38	67.34	78.38	-11510	8637	11510	27
0	138	- 66.98	48.60	66.98	- 8683	10990	10990	28
0	138	- 97.81	118.9	118.9	- 7375	9127	9127	29
0	138	-168.3	143.9	168.3	- 9633	10050	10050	30
0	138	-566.2	541.9	566.2	-17690	12040	17690	31
0	138	-467.2	515.6	515.6	-16530	16670	16670	32
0	138	- 99.82	97.79	99.82	-347.7	366.1	366.1	33
0	138	-347.7	366.1	366.1	-14720	12300	14720	34
0	138	-222.1	218.9	222.1	- 9008	10980	10980	35
0	138	-198.3	262.8	262.8	-14850	10930	14850	36

Table 3.3

Case c)

		T_1			X_1			
y_1	L_1	Norm Min	Norm Max	Norm Abs	Norm Min	Norm Max	Norm Abs	Earthquake Number
-70	208	-11780	10140	11780	-16550	17120	17120	1
-70	208	-13810	11470	13810	-20590	16580	20590	2
-70	208	- 4252	4059	4252	- 7330	5838	7330	3
-70	208	- 8313	8068	8313	-10310	9692	10310	4
-70	208	-13160	10590	13160	-11990	15800	15800	5
-70	208	-11470	9402	11470	-14490	15740	15740	6
-70	208	-11220	13690	13690	-15010	22000	22000	7
-70	208	- 7498	6442	7498	- 9033	11030	11030	8
-70	208	-15470	15860	15860	-21230	27210	27210	9
-70	208	-14470	18680	18680	-21110	22470	22470	10
-70	208	- 2647	3304	3304	- 8519	8385	8519	11
-70	208	- 2865	3415	3415	-10410	8419	10410	12
-70	208	- 6333	6571	6571	-12610	8821	12610	13
-70	208	- 8121	11920	11920	-11500	19760	19760	14
-70	208	- 8961	7421	8961	-11800	8291	11800	15
-70	208	- 2250	2816	2816	- 6645	7091	7091	16
-70	208	- 8454	10880	10880	-15630	21160	21160	17
-70	208	-11370	9986	11370	-16790	20050	20050	18
-70	208	- 6782	6079	6782	- 9045	10270	10270	19
-70	208	- 8789	9126	9126	-13230	12250	13230	20
-70	208	- 7676	7145	7676	-11390	11180	11390	21
-70	208	-10740	11130	11130	-11980	13420	13420	22
-70	208	- 3326	5045	5045	- 6326	6163	6326	23
-70	208	- 3147	3480	3480	- 8151	5893	8151	24
-70	208	- 4263	4867	4867	- 5791	7925	7925	25
-70	208	- 4496	4074	4496	- 9337	6120	9337	26
-70	208	- 2548	3306	3306	- 8648	6769	8648	27
-70	208	- 4170	3708	4170	- 7030	8946	8946	28
-70	208	- 7160	8566	8566	-11070	12770	12770	29
-70	208	- 5060	6348	6348	- 8463	11030	11030	30
-70	208	- 7691	11120	11120	-10730	14630	14630	31
-70	208	-14500	14160	14500	-22760	21320	22760	32
-70	208	- 4168	6005	6005	- 7680	8183	8183	33
-70	208	-13090	11010	13090	-15600	16890	16890	34
-70	208	- 6079	5249	6079	-11290	9221	11290	35
-70	208	- 6189	7821	7821	-10330	13580	13580	36

Table 3.3

Case d)

y_1	L_1	T_1 Norm Min	T_1 Norm Max	T_1 Norm Abs	X_1 Norm Min	X_1 Norm Max	X_1 Norm Abs	Earthquake Number
70	68	- 9691	11350	11350	-16190	17840	17840	1
70	68	-10560	13740	13740	-20360	16820	20360	2
70	68	- 3465	4204	4204	- 7089	5549	7089	3
70	68	- 6830	7656	7656	- 9758	9513	9758	4
70	68	- 8717	11460	11460	-11410	13470	13470	5
70	68	- 9692	9990	9990	-12150	13450	13450	6
70	68	-15210	11060	15210	-16920	22820	22820	7
70	68	- 5945	6734	6734	- 8591	10130	10130	8
70	68	-16880	15220	16880	-20700	28120	28120	9
70	68	-19180	13710	19180	-21740	22560	22560	10
70	68	- 3251	2141	3251	- 6871	7667	7667	11
70	68	- 3010	2796	3010	- 8696	6833	8696	12
70	68	- 5800	6234	6234	-11380	8581	11380	13
70	68	-12460	7203	12460	-12220	19530	19530	14
70	68	- 6459	8718	8718	-11600	8418	11600	15
70	68	- 2750	2132	2750	- 5711	6629	6629	16
70	68	-11390	8605	11390	-14680	20820	20820	17
70	68	-10570	11200	11200	-16720	19350	19350	18
70	68	- 6012	5707	6012	- 9148	10660	10660	19
70	68	- 8280	7923	8280	-12420	10960	12420	20
70	68	- 7200	6964	7200	-10180	10080	10180	21
70	68	-11320	10720	11320	-11840	14010	14010	22
70	68	- 4538	3377	4538	- 5658	7060	7060	23
70	68	- 3657	3247	3657	- 8455	5672	8455	24
70	68	- 4920	4026	4920	- 6669	8177	8177	25
70	68	- 3842	4313	4313	- 7919	6201	7919	26
70	68	- 3464	2525	3464	- 8435	6667	8435	27
70	68	- 4400	4547	4547	- 7077	9381	9381	28
70	68	- 9111	7704	9111	-11740	12810	12810	29
70	68	- 6503	5386	6503	- 8779	11290	11290	30
70	68	-10970	7681	10970	-11880	13940	13940	31
70	68	-15020	16720	16720	-23220	23300	23300	32
70	68	- 5572	4311	5572	- 7237	8593	8593	33
70	68	-10650	12390	12390	-13360	15550	15550	34
70	68	- 5842	7012	7012	-11270	10260	11270	35
70	68	- 8305	6220	8305	-10770	15670	15670	36

Table 3.3

Case d)

y_1	L_1	T_1 Norm Min	T_1 Norm Max	T_1 Norm Abs	X_1 Norm Min	X_1 Norm Max	X_1 Norm Abs	Earthquake Number
0	138	-178.8	149.1	178.8	-13340	21660	21660	1
0	138	-288.6	278.0	288.6	-16490	21110	21110	2
0	138	- 86.01	79.90	86.01	-14620	12060	14620	3
0	138	-100.5	98.43	100.5	-12240	18240	18240	4
0	138	-272.6	286.4	286.4	-15230	16660	16660	5
0	138	-153.1	124.2	153.1	-18390	18750	18750	6
0	138	-178.8	155.0	178.8	-14990	20790	20790	7
0	138	-182.6	195.4	195.4	-18370	15980	18370	8
0	138	-214.2	171.4	214.2	-21780	23060	23060	9
0	138	-140.4	147.0	147.0	-16870	21940	21940	10
0	138	- 28.78	32.68	32.68	-11970	10660	11970	11
0	138	- 21.81	21.16	21.81	-12240	11980	12240	12
0	138	-115.5	116.6	116.6	-18970	14140	18970	13
0	138	-225.7	232.7	232.7	-12970	17680	17680	14
0	138	-132.3	129.3	132.3	-13730	14180	14180	15
0	138	- 48.13	54.39	54.39	- 9668	11420	11420	16
0	138	- 49.98	102.9	102.9	-17690	17080	17960	17
0	138	-294.4	303.1	303.1	-16000	19460	19460	18
0	138	-244.0	252.6	252.6	-18570	10800	18570	19
0	138	-202.7	187.9	202.7	-12830	14320	14320	20
0	138	-113.3	129.3	129.3	-13920	11210	13920	21
0	138	-192.1	249.9	249.9	-21050	15260	21050	22
0	138	- 57.37	59.45	59.45	-18010	13830	18010	23
0	138	- 46.26	69.64	69.64	-14750	7946	14750	24
0	138	- 83.00	49.21	83.00	- 7454	9089	9089	25
0	138	- 67.14	54.99	67.14	-11420	10400	11420	26
0	138	- 40.78	34.31	40.78	-16220	13480	16220	27
0	138	- 34.62	24.65	34.62	-14510	13600	14510	28
0	138	- 50.23	60.51	60.51	-10590	10810	10810	29
0	138	- 87.01	74.62	87.01	-12280	13990	13990	30
0	138	-293.7	277.9	293.7	-20970	13500	20970	31
0	138	-237.9	265.4	265.4	-18870	20330	20330	32
0	138	- 49.78	51.94	51.94	-14000	11020	14000	33
0	138	-176.9	192.2	192.2	-18020	14900	18020	34
0	138	-114.2	111.4	114.2	-12210	16150	16150	35
0	138	-103.3	134.9	134.9	-19410	12650	19410	36

Table 3.3

Case d)

		T_1			X_1			
y_1	L_1	Norm Min	Norm Max	Norm Abs	Norm Min	Norm Max	Norm Abs	Earthquake Number
-70	208	- 8887	7952	8887	-12290	12170	12290	1
-70	208	-11440	9914	11440	-17310	13420	17310	2
-70	208	- 3749	3079	3749	- 5937	4300	5937	3
-70	208	- 5622	5315	5612	- 7500	8864	8864	4
-70	208	- 9384	7948	9384	- 8443	10810	10810	5
-70	208	- 8783	7655	8783	- 9880	11210	11210	6
-70	208	- 7725	11440	11440	-11750	18120	18120	7
-70	208	- 5801	5564	5801	- 7726	9035	9035	8
-70	208	-10700	14330	14330	-16950	24300	24300	9
-70	208	- 9664	15240	15240	-14500	18100	18100	10
-70	208	- 1862	2685	2685	- 5872	6719	6719	11
-70	208	- 2317	2616	2616	- 7771	5693	7771	12
-70	208	- 5181	5158	5181	- 9679	6958	9679	13
-70	208	- 5653	9781	9781	-10150	15600	15600	14
-70	208	- 6875	4980	6875	- 8449	5946	8449	15
-70	208	- 1873	2604	2604	- 4979	4920	4979	16
-70	208	- 6209	8414	8414	-10600	16930	16930	17
-70	208	- 7677	6819	7677	-11780	15300	15300	18
-70	208	- 4898	4708	4898	- 6575	7069	7069	19
-70	208	- 5245	6011	6011	- 7929	8969	8969	20
-70	208	- 5178	5073	5178	- 8054	7966	8054	21
-70	208	- 9714	10380	10380	- 8884	12590	12590	22
-70	208	- 2854	3731	3731	- 4256	5103	5103	23
-70	208	- 2783	2507	2783	- 6508	4434	6508	24
-70	208	- 2860	3929	3929	- 4986	6182	6182	25
-70	208	- 3317	2451	3317	- 5692	4324	5692	26
-70	208	- 2051	2468	2468	- 7521	5687	7521	27
-70	208	- 3461	3094	3461	- 5526	7241	7241	28
-70	208	- 4769	6813	6813	- 8384	9812	9812	29
-70	208	- 3274	4908	4908	- 5783	8645	8645	30
-70	208	- 6397	9808	9808	- 9226	12010	12010	31
-70	208	-12280	10110	12280	-16130	18380	18380	32
-70	208	- 2789	4288	4288	- 5669	6790	6790	33
-70	208	- 9474	9105	9105	-10370	12390	12390	34
-70	208	- 5390	4526	5390	- 9129	8434	9129	35
-70	208	- 4628	6609	6609	- 8258	12960	12960	36

Table 3.3

Case e)

y_1	L_1	T_1 Norm Min	T_1 Norm Max	T_1 Norm Abs	X_1 Norm Min	X_1 Norm Max	X_1 Norm Abs	Earthquake Number
70	68	-22020	27320	27320	-38760	47430	47430	1
70	68	-21300	21740	21740	-42070	43230	43230	2
70	68	- 8930	9180	9180	-16300	15920	16300	3
70	68	-16300	15920	16300	-28350	28600	28600	4
70	68	-28870	32390	32390	-70090	67280	70090	5
70	68	-25520	18810	25520	-51580	45780	51580	6
70	68	-20160	23610	23610	-64540	68940	68940	7
70	68	-11950	15660	15660	-34460	53640	53640	8
70	68	-20490	23600	23600	-37480	43600	43600	9
70	68	-26150	23610	26150	-46660	50760	50760	10
70	68	- 6989	5937	6989	-22360	21050	22360	11
70	68	- 6296	5994	6296	-15790	16380	16380	12
70	68	-16630	17510	17510	-40320	33390	40320	13
70	68	-17460	16900	17460	-47150	47400	47400	14
70	68	-14710	18040	18040	-41020	48490	48490	15
70	68	- 4727	5130	5130	-16400	14360	16400	16
70	68	-17840	17560	17840	-53990	49090	53990	17
70	68	-22830	24680	24680	-65680	56220	65680	18
70	68	-15830	14220	15830	-42150	37680	42150	19
70	68	-21720	21720	21720	-34650	37830	37830	20
70	68	-15070	14060	15070	-46350	44420	46350	21
70	68	-16400	15960	16400	-30560	30740	30740	22
70	68	- 8525	7062	8525	-25320	18540	25320	23
70	68	- 9882	11070	11070	-34420	34860	34860	24
70	68	- 7709	8002	8002	-18230	17660	18230	25
70	68	-13540	13330	13540	-31350	31870	31870	26
70	68	- 9601	8934	9601	-23730	25700	25700	27
70	68	-11210	10950	11210	-38150	31390	38150	28
70	68	-15320	15500	15500	-32600	31730	32600	29
70	68	-13610	13730	13730	-31090	36060	36060	30
70	68	-17390	18110	18110	-37250	35320	37250	31
70	68	-36750	36240	36750	-99480	103600	103600	32
70	68	-14690	14350	14650	-45770	46700	46700	33
70	68	-21420	23390	23990	-50200	53770	53770	34
70	68	-14650	14580	14650	-40340	36000	40340	35
70	68	-18230	17400	18230	-62990	62220	62990	36

Table 3.3

Case e)

y_1	L_1	T_1 Norm Min	T_1 Norm Max	T_1 Norm Abs	X_1 Norm Min	X_1 Norm Max	X_1 Norm Abs	Earthquake Number
0	138	-761.1	792.4	792.4	-117300	114300	117300	1
0	138	-861.4	844.6	861.4	-162200	163900	163900	2
0	138	-479.4	485.8	485.8	- 89720	95700	95700	3
0	138	-424.9	416.7	424.9	-119400	120000	120000	4
0	138	-358.8	348	358.8	- 69820	68940	69820	5
0	138	-775.9	777.1	777.1	-192900	191500	192900	6
0	138	-356.9	357.2	357.2	- 91980	74440	91980	7
0	138	-798.9	817.4	817.4	-187900	195500	195500	8
0	138	-371.9	337.4	371.9	- 88500	73500	88500	9
0	138	-433.8	446.4	446.4	- 33660	39090	39090	10
0	138	- 96.50	101.0	101.0	- 18710	24290	24290	11
0	138	-200.8	191.2	200.8	- 45610	45860	45860	12
0	138	-428	427.9	428	- 90080	100500	100500	13
0	138	-717	754.4	754.4	-131400	131000	131400	14
0	138	-576.8	586	586	- 99520	101500	101500	15
0	138	-227.6	232.4	232.4	- 50830	46730	50830	16
0	138	-219.3	226.3	226.3	- 67820	58430	67820	17
0	138	-759.2	768.3	768.3	-166900	170300	170300	18
0	138	-396.6	380.5	396.6	- 71320	73420	73420	19
0	138	-472.3	455.2	472.3	- 55140	59470	59470	20
0	138	-277.1	290.6	290.6	- 43690	40980	43690	21
0	138	-568.8	588	588	-102900	93180	102900	22
0	138	-433.6	438.1	438.1	- 80180	81390	81390	23
0	138	-223.7	235	235	- 53670	52360	53670	24
0	138	-324.9	323.6	324.9	- 74140	73650	74140	25
0	138	-194.9	194.8	194.9	- 48670	50150	50150	26
0	138	-218.7	221.3	221.3	- 79260	78980	79260	27
0	138	-287.8	300.3	300.3	- 73290	67990	67990	28
0	138	-290.7	289.3	290.7	- 80380	85610	85610	29
0	138	-315.4	325.5	325.5	- 79330	77560	79330	30
0	138	-815.4	849.4	849.4	-153000	148500	153000	31
0	138	-866.4	930.6	930.6	-153100	165000	165000	32
0	138	-357.8	375.8	375.8	- 75710	77670	77670	33
0	138	-698.8	709.1	709.1	-174200	168700	174200	34
0	138	-363.9	365.2	365.2	- 55470	66940	66940	35
0	138	-767.4	751.1	767.4	-184300	189700	189700	36

Table 3.3

Case e)

y_1	L_1	T_1 Norm Min	T_1 Norm Max	T_1 Norm Abs	X_1 Norm Min	X_1 Norm Max	X_1 Norm Abs	Earthquake Number
-70	208	-24920	26760	26760	-58680	55750	58680	1
-70	208	-20570	21990	21990	-54360	51480	53460	2
-70	208	-13620	13950	13950	-33870	30630	33870	3
-70	208	-12570	13630	13630	-38990	35500	38990	4
-70	208	-25210	25760	25760	-58740	60300	60300	5
-70	208	-25080	23340	25080	-57220	63670	63670	6
-70	208	-16530	15510	16530	-41720	52840	52840	7
-70	208	-12170	10740	12170	-38090	34360	38090	8
-70	208	-27470	28650	28650	-49090	46240	49090	9
-70	208	-22200	22040	22200	-40600	37250	40600	10
-70	208	- 8031	7974	8031	-43210	44840	44840	11
-70	208	- 4962	6052	6052	-25120	31620	31620	12
-70	208	-15070	14440	15070	-33160	31950	33160	13
-70	208	-13300	13910	13910	-69240	69860	69860	14
-70	208	-18260	17030	18260	-70400	76270	76270	15
-70	208	- 4586	4039	4586	-20190	21500	21500	16
-70	208	-14550	14690	14690	-52370	53670	53670	17
-70	208	-21980	23920	23920	-57780	59240	59240	18
-70	208	-16160	16040	16160	-45580	47470	47470	19
-70	208	-26190	25030	25030	-58230	54260	58230	20
-70	208	-20140	20180	20180	-47100	49100	49100	21
-70	208	-14920	15670	15670	-29190	27460	29190	22
-70	208	-10270	10250	10270	-25030	23900	25030	23
-70	208	- 6273	4867	6273	-23260	18650	23260	24
-70	208	-10300	10340	10340	-38530	37490	38530	25
-70	208	- 9476	8582	9476	-23180	26790	26790	26
-70	208	- 6295	6367	6367	-32160	35150	35150	27
-70	208	- 6221	5625	6221	-27190	22280	27190	28
-70	208	-13490	14120	14120	-41030	42960	42960	29
-70	208	-12180	12740	12740	-32160	29960	32160	30
-70	208	-12940	17280	17280	-30250	29900	30250	31
-70	208	-24700	25890	25890	-62290	62180	62290	32
-70	208	- 6417	9669	9669	-26400	23940	26400	33
-70	208	-22920	21770	22920	-53450	50860	53450	34
-70	208	-10350	10590	10590	-35590	38980	38980	35
-70	208	- 9471	10180	10180	-44000	44460	44460	36

50272-101

REPORT DOCUMENTATION PAGE	1. REPORT NO. NSF/RA-780751	2.	3. Recipient's Accession No.

4. Title and Subtitle
Seismic Response of a Rigid Steam Generator Suspended from a Simplified Supporting Structure

5. Report Date
February 1978

6.

7. Author(s)
J. L. Bogdanoff, H. Lo, G. Guthrie

8. Performing Organization Rept. No.

9. Performing Organization Name and Address
Purdue University
School of Aeronautics and Astronautics
West Lafayette, IN 47907

10. Project/Task/Work Unit No.

11. Contract(C) or Grant(G) No.
(C)
(G) ENV7401575

12. Sponsoring Organization Name and Address
Engineering and Applied Science (EAS)
National Science Foundation
1800 G Street, N.W.
Washington, D.C. 20550

13. Type of Report & Period Covered

14.

15. Supplementary Notes

16. Abstract (Limit: 200 words)

The loads in the vertical support rods and in the horizontal tie rods are investigated as a function of their geometric configuration when the base of a simple supporting structure is subjected to a set of earthquake accelerograms suitably normalized. Three dimensional linear equations of motion are derived assuming that the vertical support rods can carry compression, that the steam generator may be treated as a rigid body, and that the top girder system forms a rigid body. Numerical results are presented in a two-dimensional example. The main conclusions which can be made are that: (1) the dynamic loads in the vertical support rods are dependent upon the configuration of the horizontal tie rod with some configurations producing much smaller dynamic loads than others; (2) if the maximum acceleration of ground excitation is in the range of .3g, then the influence of the unloading of some of the vertical support rods should be accounted for in the equations of motion including the deformation of the top support; and (3) attention should be given in design to the dynamic loads that the vertical support rods must carry.

17. Document Analysis a. Descriptors

Seismic waves
Earthquakes
Boilers
Rigid frames
Equations of motion
Linear algebraic equations
Dynamic loads

b. Identifiers/Open-Ended Terms

Earthquake Hazards Mitigation

c. COSATI Field/Group

18. Availability Statement	19. Security Class (This Report)	21. No. of Pages
NTIS	20. Security Class (This Page)	22. Price

(See ANSI–Z39.18)

OPTIONAL FORM 272 (4–77)
(Formerly NTIS–35)
Department of Commerce